SWITCH CATALOG

SAFRAN
Labinal Power Systems

FEATURES

- All parts treated for corrosion resistance
- Actuator metal parts are stainless passivated
- Operating characteristics depend on switch selected
- Catalog numbers which appear with a slash between actuator and basic switch part number are screw type assemblies and can be supplied as separate components

WHEN ORDERING SPECIFY . . .

- Catalog number of actuator plus part number of basic switch.

Order Example:

A2-5 / **K3-4** = **A2-5/K3-4**

A2-5 → Catalog Number of Actuator
K3-4 → Basic Switch
A2-5/K3-4 → Complete Part Number

SELECTION AND SPECIFICATIONS TABLE

TYPE

Roller Lever Type A2-5	Circuit	Electrical Rating Life	Catalog Number	Characteristics: Operating Force (Max.)	Release Force (Min.)	Pretravel (Max.)	Diff. Travel	Over Travel
Actuator A2-5 Shown with Basic Switch K3-4	3 PDT 6 CKT Momentary	Can be used with "D" or "K" series basic switch shown on pg D2.	A2-5/K3-4	14 oz.	1 oz.	.240 in.	112 +/- .028 in.	.060 in.
Extended Leaf Type A5-18 **Actuator A5-18 Shown with Basic Switch D8-4**	2 PDT 4 CKT Momentary	Can be used with "D" or "K" series basic switch shown on pg D2.	A5-18/D8-4	16 +/- 4 oz.		.375 in +/-.066 in.	.156 in.	.156 in.

APPROXIMATE DIMENSIONS

A2-5

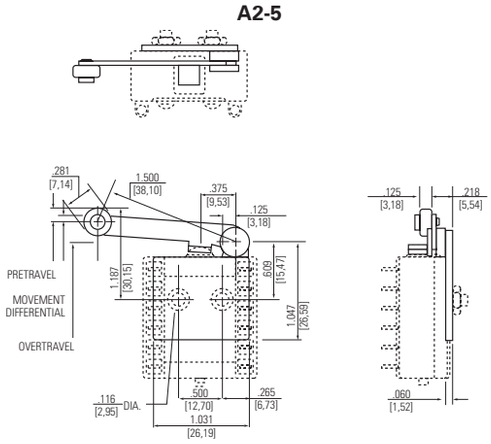
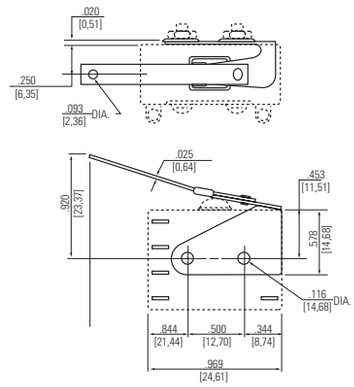
A5-18