KLIXON® | 9115 Series

15 to 30 Amp Precision Thermal Circuit Breaker

FEATURES

- 30VDC, 15 to 30 Amps
- Sealed assemblies, available in manual and automatic reset options
- Ignition protected SAE J1171 & CCC certified
- 9115-5 meets CID A-A-55571/01 specifications
- 9115-6 meets CID A-A-55571/02 specifications
- UL Recognized E36869

DESCRIPTION

The KLIXON® 9115 series of circuit breakers was designed for waterproof electrical systems of ordnance vehicles. The 9115 series is recommended for other mobile military and ground equipment, including trucks, tractors, graders, earth movers, fuel units, and amphibious as well as commercial vehicles. In addition to a complete sealed thermal element this series of thermal breakers has molded in terminals and are supplied with rubber connectors (shells).

ORDERING INFORMATION

X – X

Configuration
9115-5 = Auto, sealed
9115-6 = Manual, sealed

Amp Rating
(15, 20, 25, 30)

PERFORMANCE CHARACTERISTICS

Calibration : 200% rated current, 77°F (25°C)	8 to 50 seconds
Ultimate Trip At 77°F (25°C)	Must hold 100%, Must trip 138%
Endurance	Per SAE J553: Automatic: 2,000 cycles @ 200% rated current Manual: 500 cycles @ 200% rated current
Interrupt Current Capacity	Per SAE J553, 600A
Vibration	10G MIL-STD-202 Method 204, Condition A
Mechanical Shock	100G MIL-STD-202 Method 213, Condition C
Dielectric Strength	MIL-STD-202 Method 301, 1500VAC min
Insulation Resistance	MIL-STD-202 Method 302, Condition B, 100 MΩ min
Weight	9115-5 : 65 grams max 9115-6 : 76 grams max

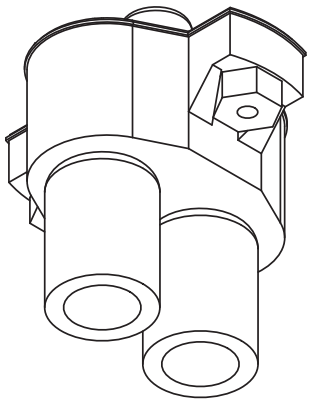

TRIP CURVE - Approximate Time, Current Characteristics At 77°F (25°C)

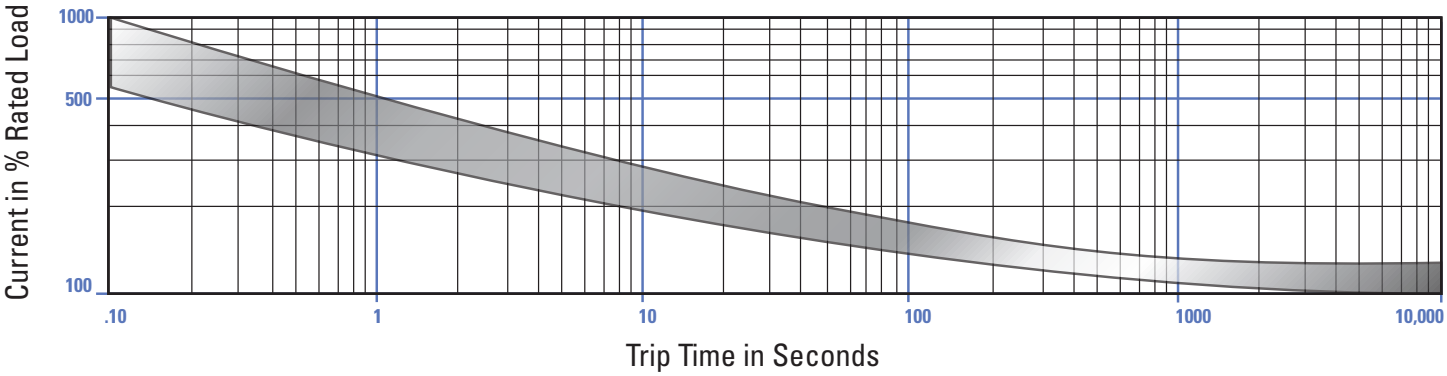

DIMENSIONS - 9115-5

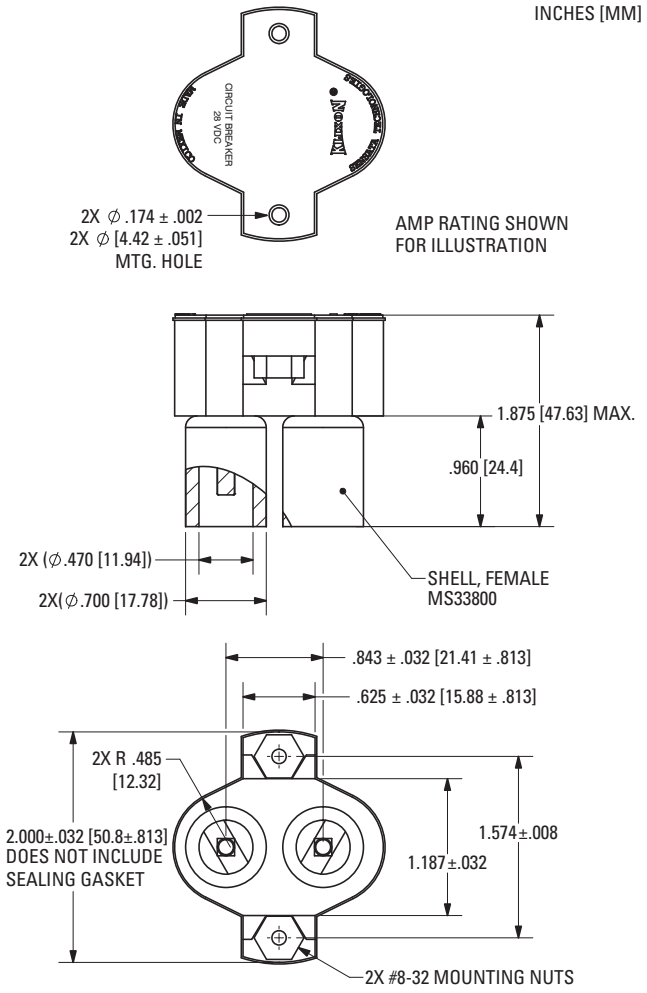

Notes:

1. Shell female MS33800 mates with MS27143 or MS27144.
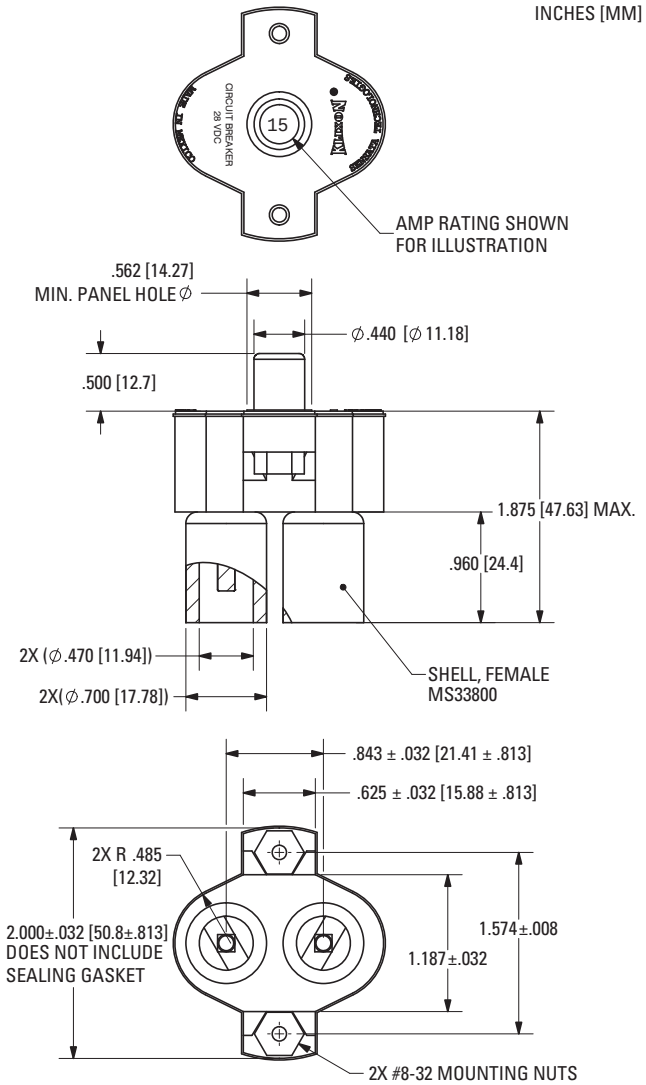
DIMENSIONS - 9115-6