Property of Sensata Technologies

ZONE	REV.	REVISION DESCRIPTION	ECN NO.	DATE
D4	AH	.780 MAX WAS .781/.719; PD	ECO-111344	25-FEB-2015

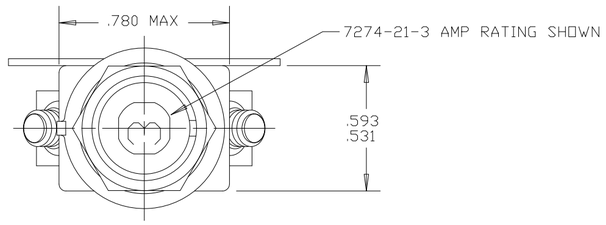

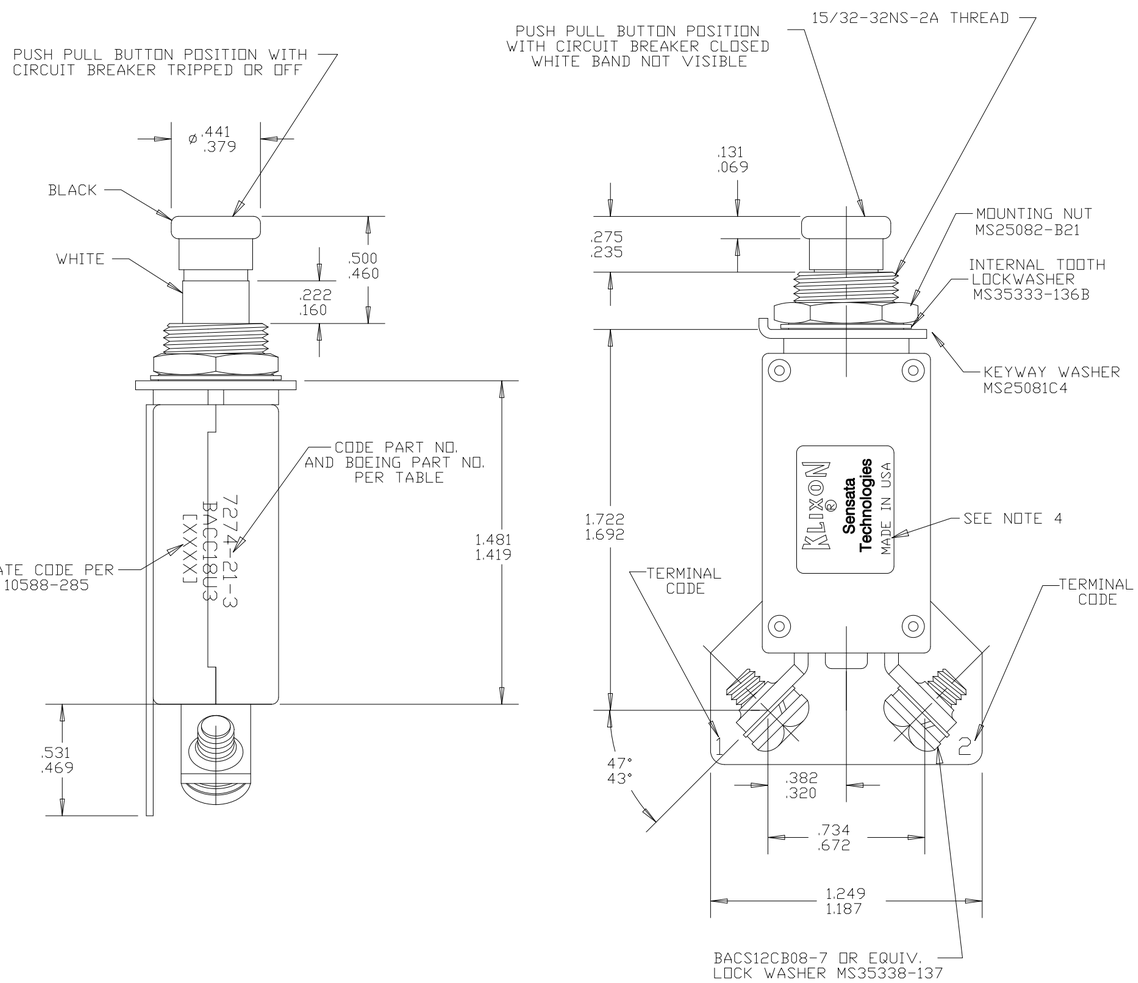

PERFORMANCE CHARACTERISTICS (DETAIL PERFORMANCE PER AS58091)

OVERLOAD CYCLING ---------- 100 CYCLES AT 200% RATING
MECHANICAL SHOCK ---------- 35 G'S AT 11.5 MILLISECOND DURATION
ACCELERATION ---------- 10 G'S MINIMUM
SAND AND DUST ---------- 12 HOURS
CORROSION ---------- SALT SPRAY 50 HOURS
HUMIDITY ---------- 10 DAYS
EXPLOSION PROOF ---------- WHILE INTERRUPTING RUPTURE CURRENTS

MAXIMUM OPERATING ALTITUDE: 80,000 FT. (24,384 M)

MAXIMUM OPERATING FORCES:
PULL OUT ----- 5 LBS. MAX. (22.2 N)
RESET ------- 5 LBS. MAX. (22.2 N)

ENDURANCE:
120 VAC ---------- 400 HZ INDUCTIVE ------- 5000 CYCLES
RESISTIVE ------- 5000 CYCLES
30 VDC ---------- INDUCTIVE ------- 2500 CYCLES
RESISTIVE ------- 5000 CYCLES
MECHANICAL---------- 10000 CYCLES

WEIGHT: 38 GRAMS

CALIBRATION:

AMBIENT TEMP.	MIN.ULT.TRIP	MAX.ULT.TRIP	200%	500%	1000%
+25°C	115% RATING	145% RATING	2-20 SEC.	.16-1.0 SEC.	.046-.28 SEC.
-54°C	135% RATING	180% RATING	15-150 SEC.	----------	----------
+71°C	90% RATING	130% RATING	1-6 SEC.	----------	----------

VIBRATION:

5 - 13 HZ	.08 DOUBLE AMPLITUDE
13 - 20 HZ	±0.7 G'S
20 - 74 HZ	.036 DOUBLE AMPLITUDE
74 - 1000 HZ	10 G'S

NOTES:

1. ALL MOUNTING HARDWARE HAS A DULL BLACK FINISH.
2. CIRCUIT BREAKERS ARE SUITABLE FOR MOUNTING IN A 1/8" THICK PANEL OR LESS.
3. TERMINAL AND MOUNTING HARDWARE MAY BE PACKAGED RATHER THAN INSTALLED.
4. COUNTRY OF ORIGIN IS SHOWN FOR ILLUSTRATION PURPOSES ONLY. COUNTRY OF ORIGIN TO BE IDENTIFIED AS REQUIRED.

SENSATA PART NO.	BOEING PART NO.	AMP RATING	MAXIMUM VOLTAGE DROP	CURRENT INTERRUPTING CAPACITY 120 VAC, 400 HZ	CURRENT INTERRUPTING CAPACITY 28 VDC
7274-21-1/2	BACC18U05	1/2	2.00	UNLIMITED	UNLIMITED
7274-21-1	BACC18U1	1	1.10	UNLIMITED	UNLIMITED
7274-21-2	BACC18U2	2	0.70	2500 AMPS	UNLIMITED
7274-21-2 1/2		2 1/2	0.50	2500 AMPS	UNLIMITED
7274-21-3	BACC18U3	3	0.33	2500 AMPS	UNLIMITED
7274-21-4	BACC18U4	4	0.30	2500 AMPS	UNLIMITED
7274-21-5	BACC18U5	5	0.25	2500 AMPS	UNLIMITED
7274-21-7 1/2	BACC18U7	7 1/2	0.20	2500 AMPS	2500 AMPS
7274-21-10	BACC18U10	10	0.15	2500 AMPS	2500 AMPS

FOR REFERENCE ONLY, CHECK LATEST REVISION BEFORE USE.
PARTS MADE TO THIS PRINT MUST CONFORM TO E9898 REV. E

DRAWN CHAS.FLEURANT DATE 28-OCT-1991
ENGINEER K.B. GASSER DATE 21-JAN-1992
APPROVED D.R.PETRIE DATE 22-DEC-1994
APPROVED DATE

SENSATA TECHNOLOGIES PROPRIETARY AND CONFIDENTIAL. NEITHER THIS PRINT NOR THE INFORMATION CONTAINED HEREON IS TO BE USED AGAINST THE INTERESTS OF SENSATA TECHNOLOGIES OR AGAINST THE INTERESTS OF ANY OF ITS AFFILIATED COMPANIES OR WHOLLY OWNED SUBSIDIARIES.

INTERPRET DIMENSIONING AND TOLERANCING PER ASME Y14.5-2009. UNLESS OTHERWISE SPECIFIED DIMENSIONS ARE IN INCHES.
TOLERANCES
DECIMALS ANGLES

DO NOT SCALE DRAWING

THIRD ANGLE PROJECTION

Sensata Technologies
529 PLEASANT STREET
P.O. BOX 2964
ATTLEBORO, MA 02703

TITLE
7274 STYLE CIRCUIT BREAKER
PUSH PULL-TRIP FREE
ENVELOPE DRAWING

SIZE	DWG NO.	REV.
C	7274-21	AH

SCALE 1:1 | AUTOCAD | SHEET 1 OF 1

DEVICE: PROJECT: 1